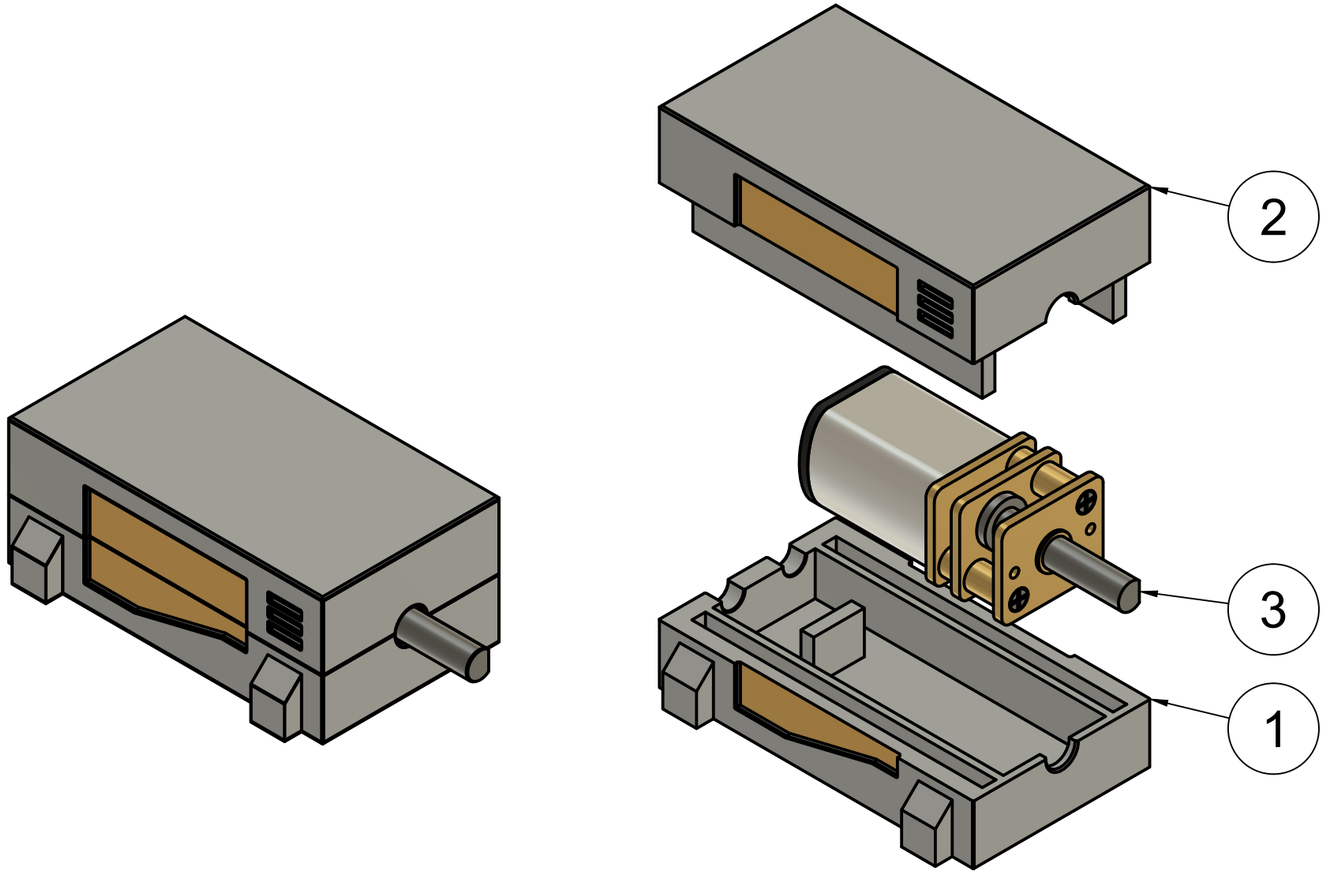

ITEM	QTY	PART NUMBER	MATERIAL
3	1	N20 MOTOR	STEEL
2	1	0.08MM MOTOR ENCLOSURE TOP	----
1	1	0.08MM MOTOR ENCLOSURE BOTTOM	----

PARTS LIST

PROJECT
Open STEM Project

TITLE
M.O.J.O. VelociMotor Assembly & Exploded

APPROVED	SIZE	CODE	DWG NO	REV
CHECKED	B		3/3	3C
DRAWN Matthew Jeide 4/19/26	SCALE 2:1	WEIGHT	SHEET 1/1	